Adaptive Logical Protection for Software Defined Optical Networks

Chen Ma

Mar. 06, 2015

Motivation

Protection	Restoration (Reprovisioning)
Physical layer	Electric layer (controller)
Pre-configured	On-time
Fast	Slow
Lots of redundancy resources	No redundancy resources
100%	Less than 100%

Objective:

Find a new protection structure to balance the features of protection and restoration.

Dynamic Establishment Protection Path Scheme

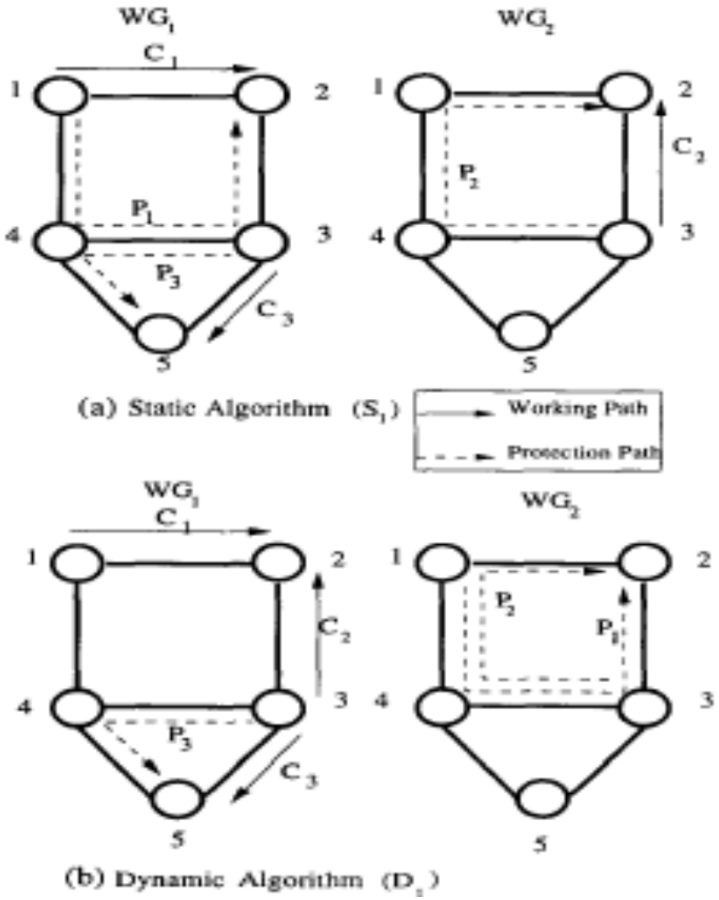

Dynamic establishment of protection path:

Backup lightpaths of the former requests can be teared down and reprovisioned, when new requests comes.

If the backup path is not established, what will happen?

V. Anand, and C. Qiao, *Dynamic Establishment of Protection Path in WDM Networks, Part I*, inProc ICCCN, pp.198-204, Las Vegas, NV, USA, 2000.

Concept of ALP

Adaptive Logical Protection (ALP):

(1) Information of backup lightpaht is stored in logical layer (controller);

(2) Resources of backup lightpath are reserved but not configured in physical layer.

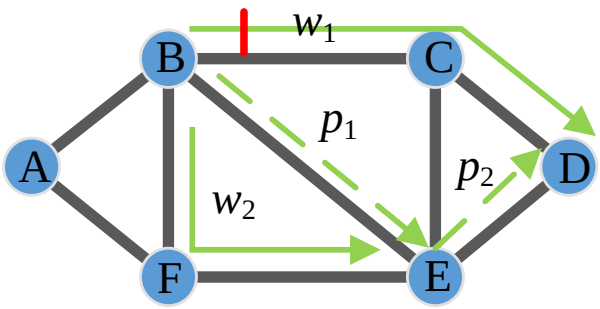

SPP for path failure

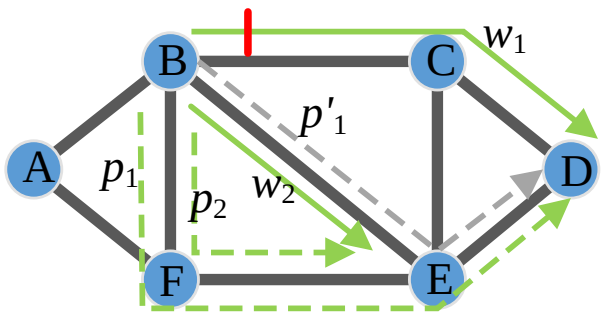

ALP for path failure

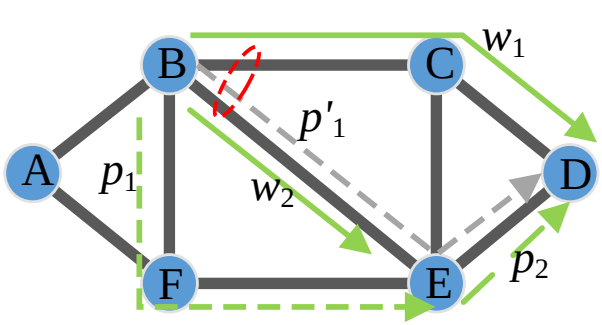

ALP for disaster

Benefits of ALP

Coming Request	SPP		ALP	
Former Request	Working	Backup	Working	Backup
Working Resources	N	N	N	N
Backup Resources	N	Y	Y	Y
Free Resources	Y	Y	Y	Y

Benefits of ALP:

- 1. Statements of protection resources and free resources are the same, and switches should not be configured for backup lightpath in most situations.
- 2. Different protection schemes such as path protection and degraded-service protection can be employed for the same request.

Protection in GMPLS

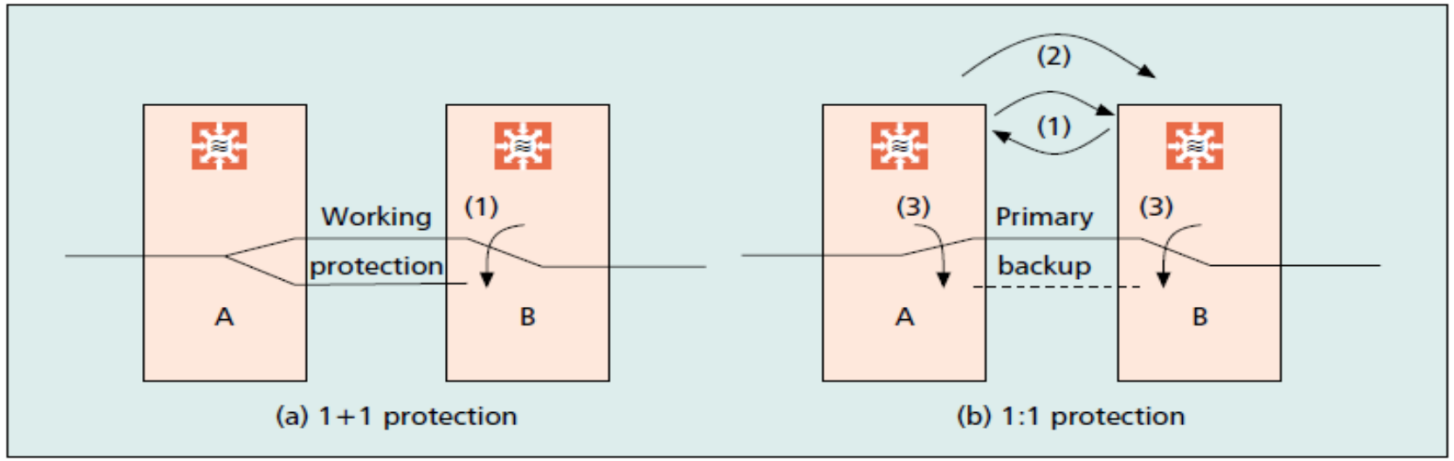

Figure 3. *a) In 1+1 span protection a connection is transmitted simultaneously over two disjoint channels (one working, one protection) and a selector is used at the receiving node to choose the best signal. If a failure occurs, (1) receiving node B switches from the working to protect channel. b) In 1:1 span protection (special case of* M:N *span protection) one dedicated backup channel is preallocated for the primary channel. If a failure occurs, (1) LMP is used to localize the failure. Once the failure has been localized, (2) an RSVP refresh message can be used to indicate path switchover, and (3) both nodes must switch to the backup channel.*

IEEE Communication Magazine, July, 2001

Advantage: fast (in physical layer)

Disadvantages: local and fixed

Protection Architecture for SDON

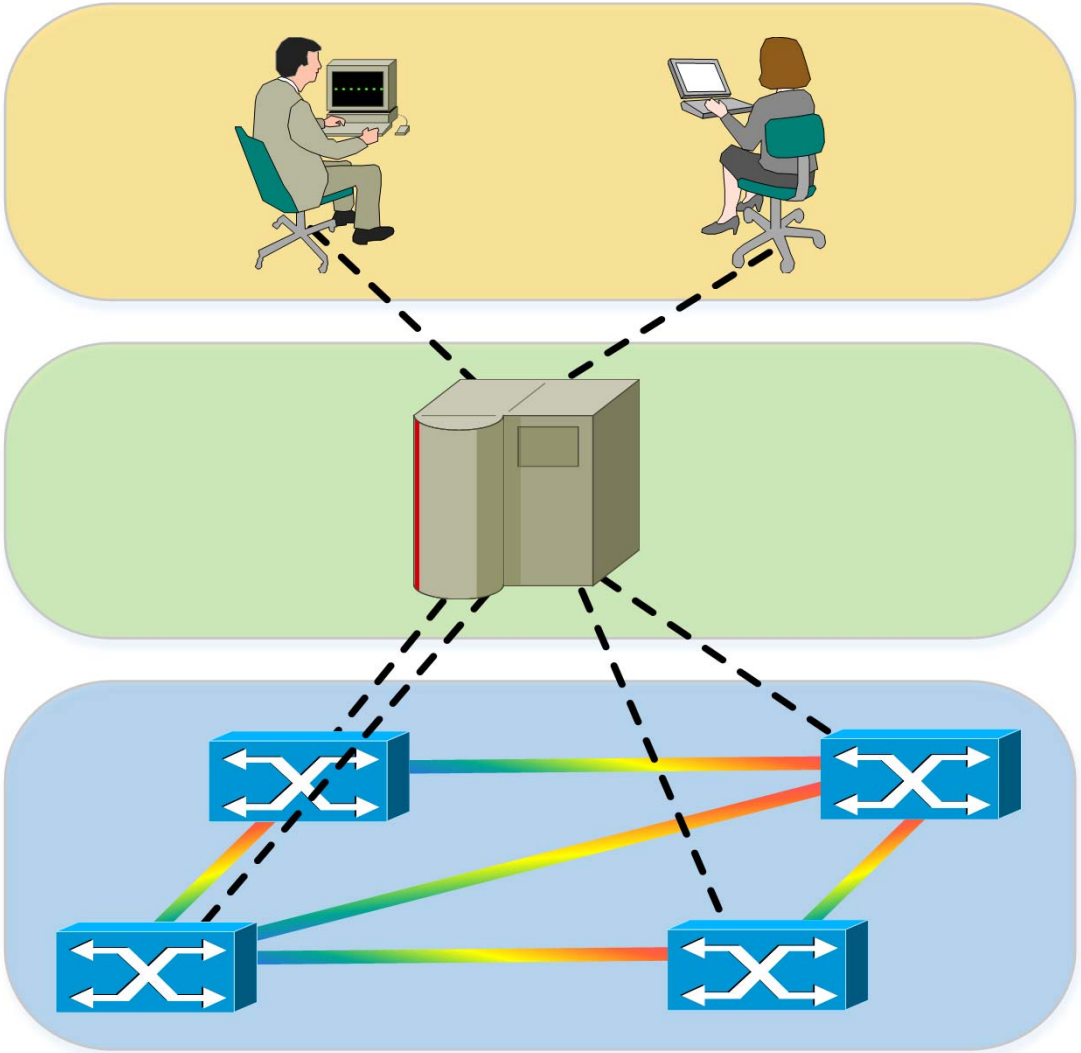

Application layer:

- Users
- Applications

Logical Layer

- PCE
- Database
- Logical Protection Module

Physical Layer:

- Switches
- Monitors
- Other components

Process of Path Calculation in Controller

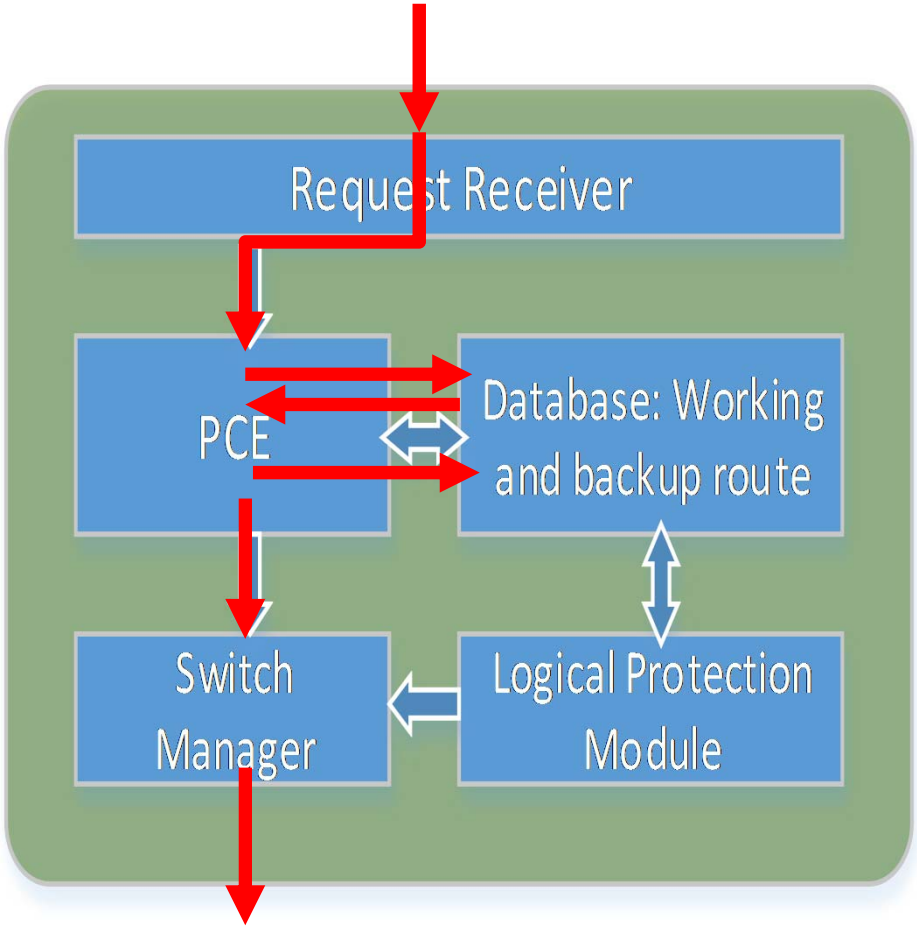

- 1.Request receiver receives connection requests and sends to PCE.
- 2. PCE gets the route information from DB.
- 3. PCE calculates both working and backup path, then updates DB, and sends message of working path to switch manager.
- 4. Switch manager sends information of working path to physical layer.

Process of Protection in Controller

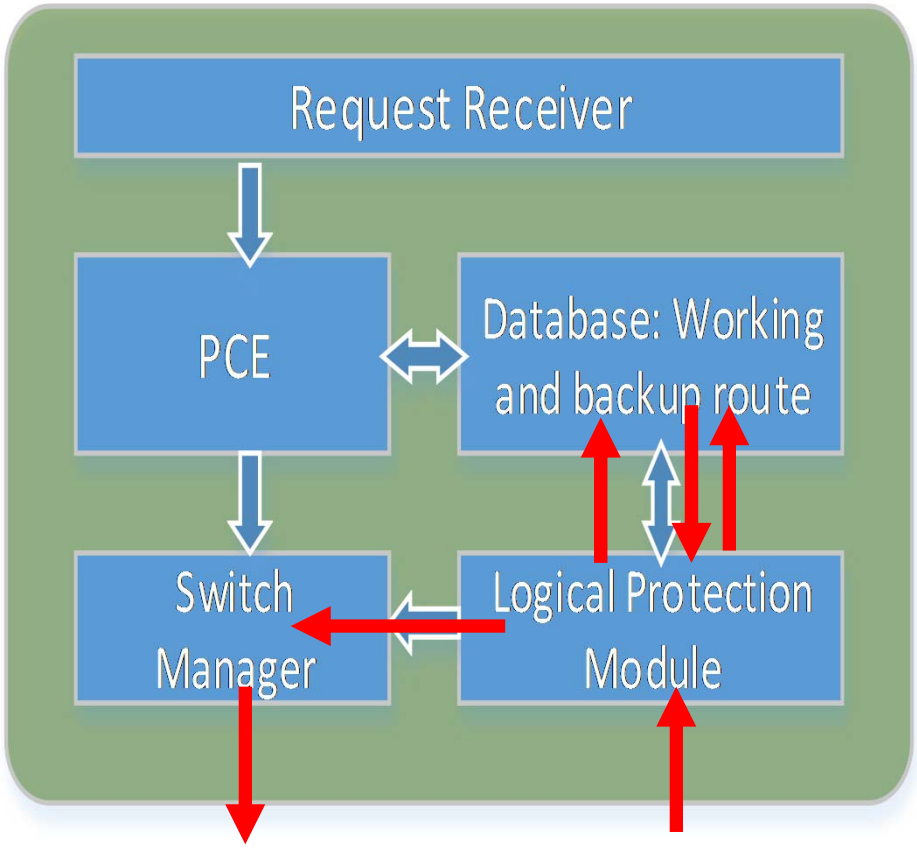

- 1. LPM receives failure notifications from physical layer
- 2. LPM requests DB for information of backup routes.
- 3. LPM sends message of backup path to switch manager and updates DB.
- 4. Switch manager sends message of backup path to physical layer.

Differences of Methods in GMPLS and SDN

	SPP	ALP	Reprovisioning
Path	Pre-configured in optical layer	Stored in controller	Figured out after disaster
Resources	Reserved and pre-configured	Reserved but not configured	Not reserved
Time	Fast	Medium	Slow
Redundancy	A lot	Medium	None
Availability	100%	100%	Less than 100%
Schemes	Single	Multiple	Multiple

Objective:

ALP for SDON is a balance between protection and restoration.

Emulation Design

- Application layer:
  - Script written by python or Java.
- Logical layer:
  - OpenDayLight in virtual machine
- Physical layer:
  - Mininet in virtual machine.

Thank you!